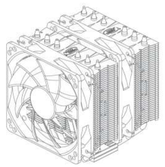
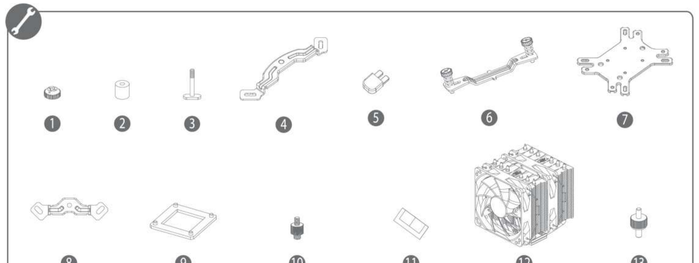
INSTALLATION GUIDE

This installation guide is applicable for NEPTWIN Series

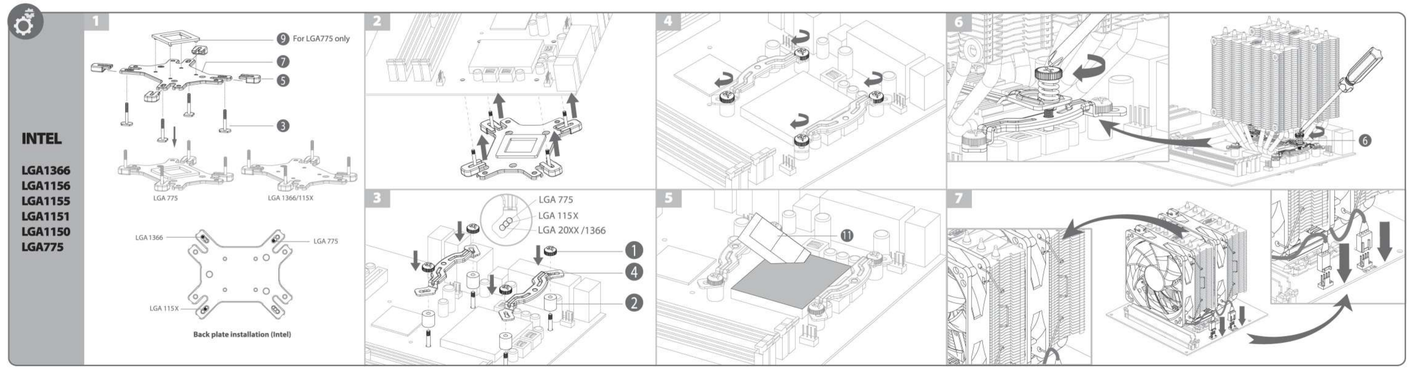


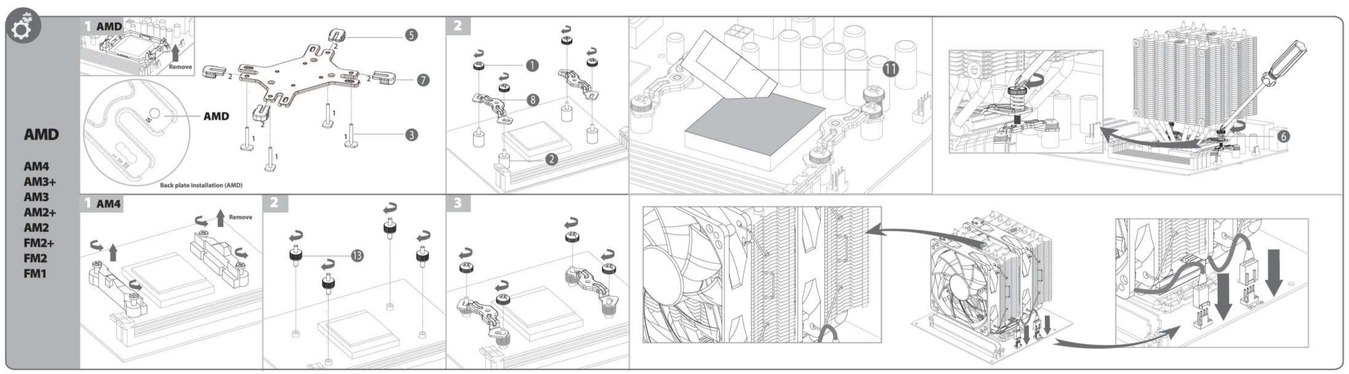
NEPTWIN

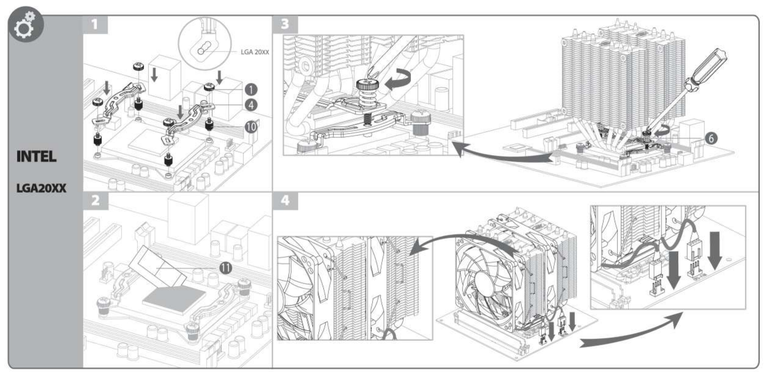
PRODUCT SCHEMATIC DRAWING



❶	Nut	4 pcs	❷	Insulation Pillar	4 pcs	❸	Screw Bolt	4 pcs	❹	Mounting Bracket(Intel)	2 pcs	❺	De-Vibration Buckle	4 pcs
❻	Retention Plate	1 pc	❼	Back Plate	1 pc	❽	Mounting Bracket(AMD)	2 pcs	❾	Insulating Washer (For LGA775 only)	1 pc	❿	Double-screw Bolt (For LGA20XX only)	4 pcs
⓫	Thermal Grease	1 pc	⓬	Heatsink set	1 pc	⓭	Double-screw Bolt (For AM4 only)	4 pcs						







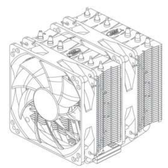
Brands and designs are trademarks from Beijing Deepcool Industries Co., Ltd.
Version not included
All rights reserved

Beijing Deepcool Industries Co., Ltd.
MADE IN CHINA

www.deepcool.com

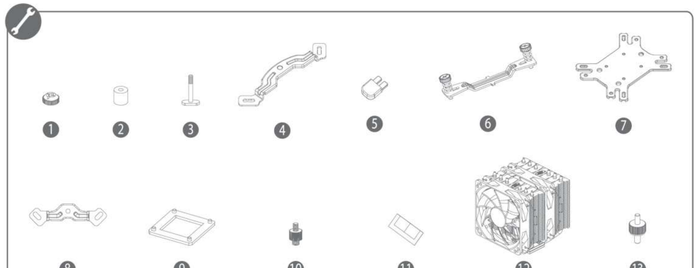
安装说明书

此说明书适用于九州风神大霜塔系列。

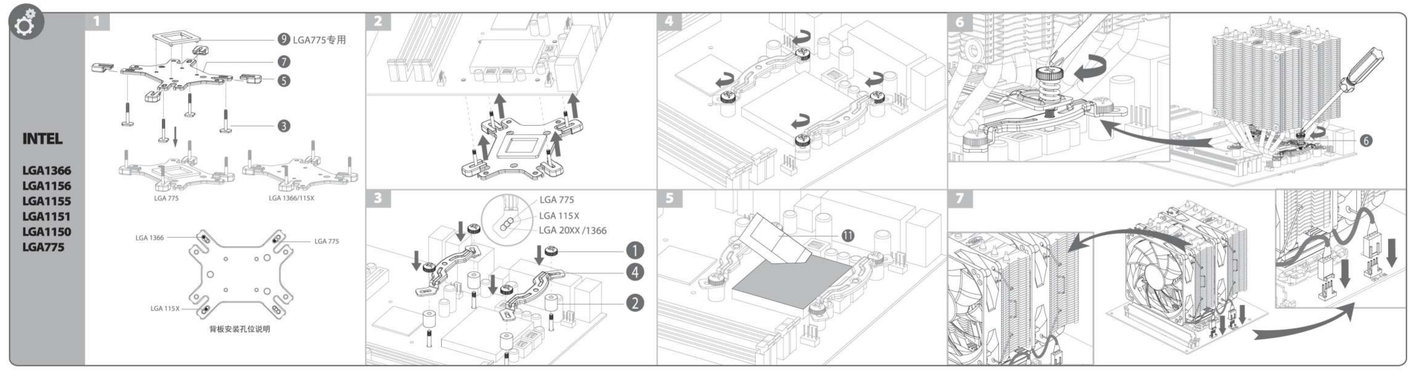


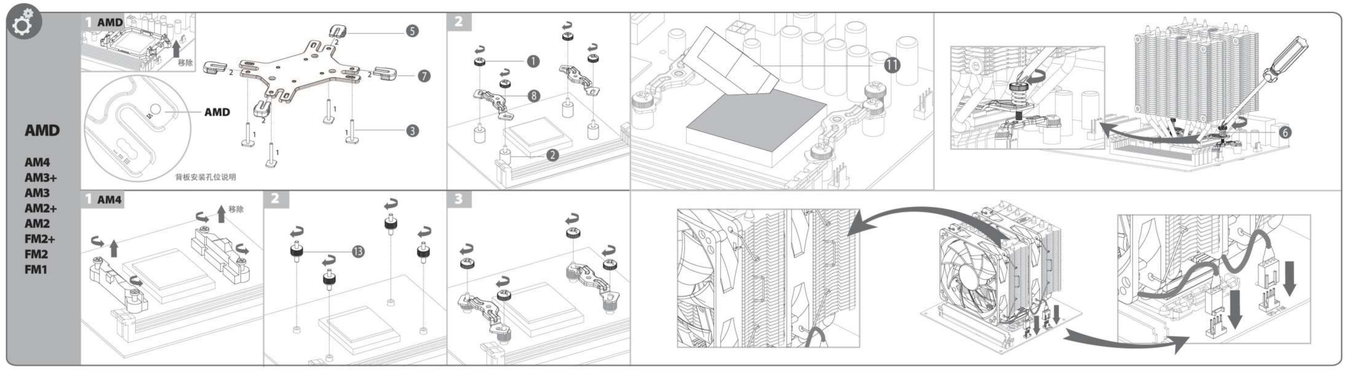
大霜塔

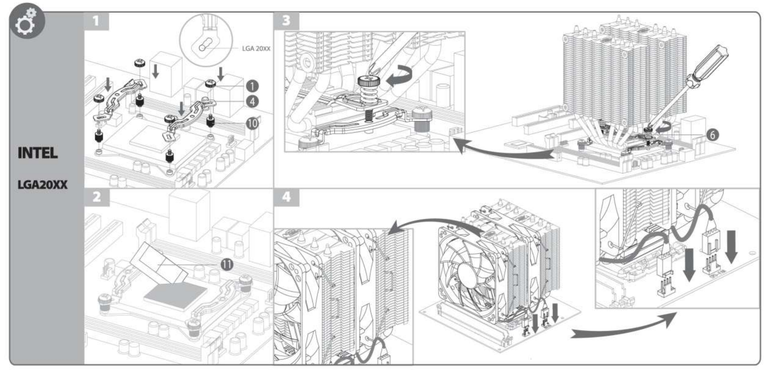
产品示意图



❶	螺母	4个	❷	绝缘柱	4个	❸	螺柱	4个	❹	Intel转接架	2个	❺	减震扣	4个
❻	扣具	1个	❼	背板	1个	❽	AMD转接架	2个	❾	绝缘垫(LGA775专用)	1个	❿	双头螺栓(LGA20XX专用)	4个
⓫	导热膏	1个	⓬	散热器主体	1个	⓭	双头螺栓 (AM4专用)	4个						







九州风神公司2017版权所有。
手册中提及的其他商标或品牌等专属所有权归各权利人所有。

出品人：北京市九州风神科技有限公司
地址：北京市海淀区翠微路9号院10号楼
中国制造

www.deepcool.com